MGE UPS SYSTEMS, INC. (MGE) CLAIMS PROPRIETARY RIGHTS IN THE MATERIAL DISCLOSED HEREON. THIS DOCUMENT IS ISSUED FOR ENGINEERING INFORMATION ONLY. IT MAY NOT BE DISCLOSED TO OTHERS NOR MAY IT BE USED FOR MANUFACTURING PURPOSES WITHOUT WRITTEN PERMISSION FROM MGE.

REVISIONS

ZONE	REV	DESCRIPTION	DATE	APPROVED
	A00	NEW RELEASE	01/10/05	HD

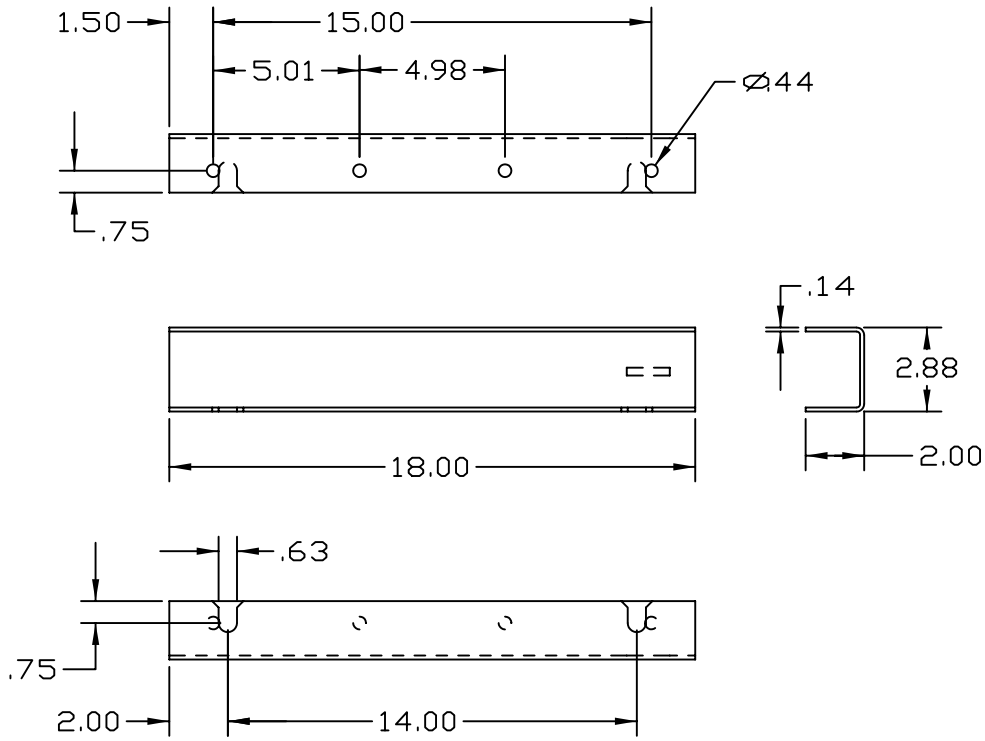

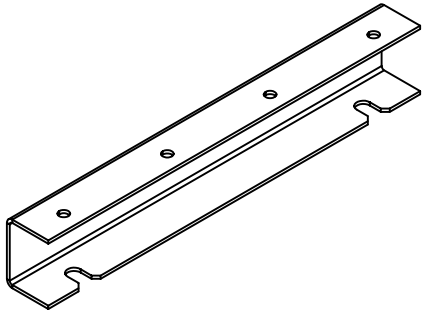

FOR MGE INSPECTION ONLY
NOT FOR FABRICATION

UNLESS OTHERWISE SPECIFIED DIMENSIONS ARE IN INCHES TOLERANCES ARE:

DECIMALS .XX ±.03 .XXX ±.010 ANGLES ± 1/2°

MATERIAL

FINISH

CONTRACT NO.

APPROVALS		DATE
DRAWN	H.DO	9/22/04
CHECKED	IK	11-11-04
MFG ENG	DP	11-11-04
ISSUED	IK	11-11-04
71-173345-00 A00		

MGE UPS SYSTEMS

MGE UPS Systems, Inc.
1660 Scenic Avenue
Costa Mesa, CA 92626

BRKT, SEISMIC

SIZE	FSCM NO.	DWG. NO.	REV.
B	9L985	71-173345-00	A00

SCALE 0.250 | 71-173345-00 A00 | SHEET 1 OF 1

NOTES: UNLESS OTHERWISE SPECIFIED.